Installation Instructions
Instrucciones de Instalación / Instructions d'installation / Installationsanleitung / Istruzioni per l'installazione

TRIPP LITE SERIES

N286 Series Optical Transceivers
Transceptores ópticos de serie N286 / Émetteurs-récepteurs optiques de la série N286 / Optische Empfänger der Serie N286 / Ricetrasmettitori ottici serie N286

Transceiver with MTP/MPO Connection / Transceptor con conexión MTP/MPO / Émetteur-récepteur avec connexion MTP/MPO / Empfänger mit MTP/MPO-Anschluss / Ricetrasmettitore con connessione MTP/MPO

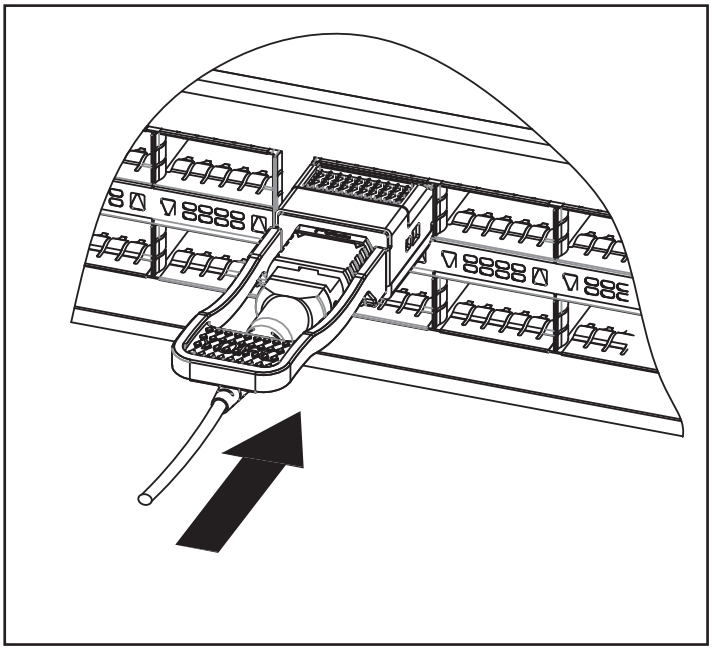

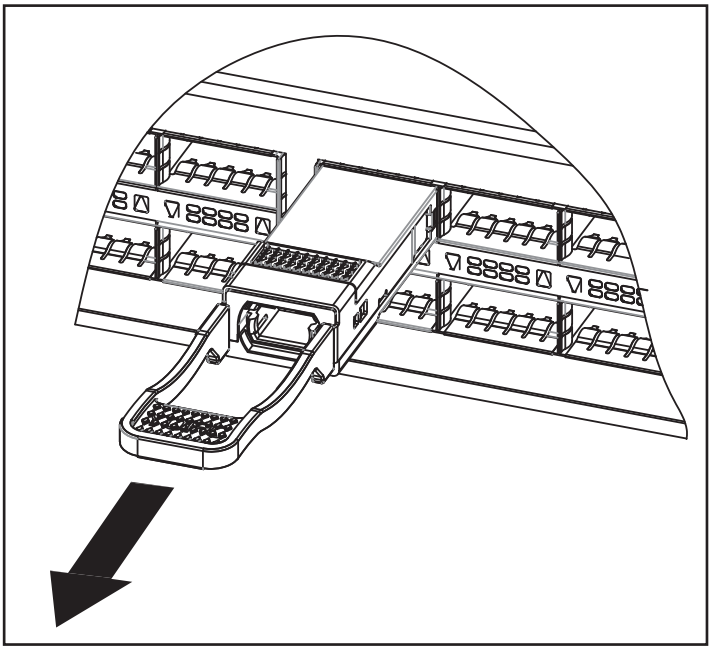

Transceiver with LC Connection / Transceptor con conexión LC / Émetteur-récepteur avec connexion LC / Empfänger mit LC-Anschluss / Ricetrasmettitore con connessione LC

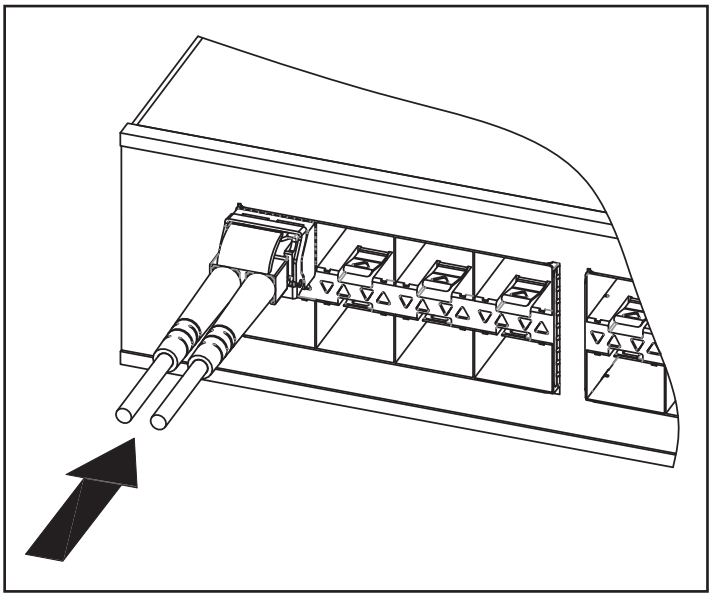

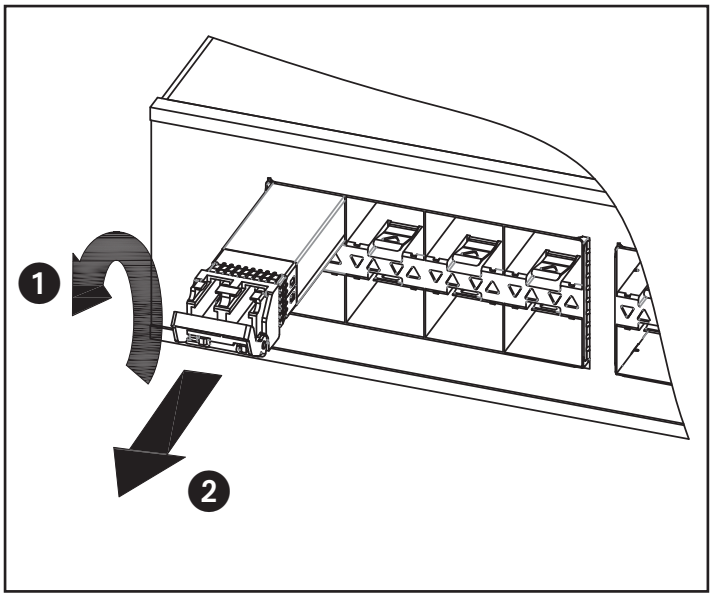

Powering Business Worldwide

Eaton
1000 Eaton Boulevard
Cleveland, OH 44122
United States
Eaton.com

© 2024 Eaton
All Rights Reserved
Publication No. 23-08-311 / 93-4924_RevA
May 2024

Eaton has a policy of continuous improvement. Specifications are subject to change without notice. Photos and illustrations may differ slightly from actual products.

Eaton is a registered trademark.

All trademarks are property of their respective owners.