Warranty Registration:
register online today for a chance to win a FREE Tripp Lite product—www.tripplite.com/warranty

Quick Start Guide

24-Port Cat6 Feed-Through Patch Panel

Model: N250-024-LP

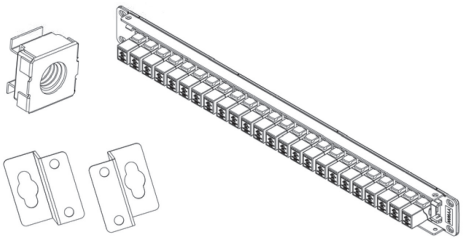

Installation

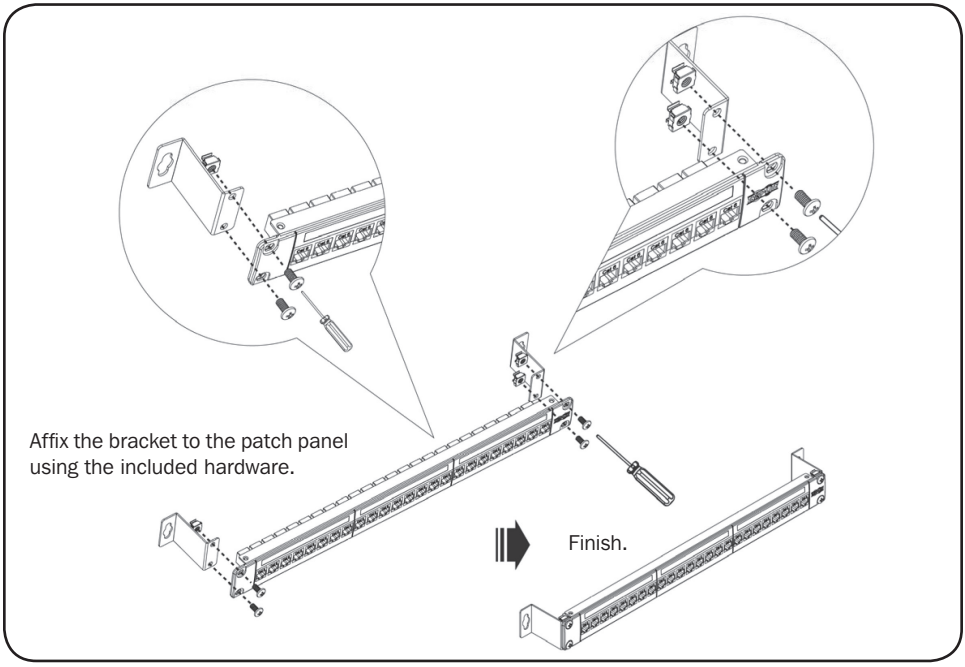

TRIPP·LITE

90 YEARS
Manufacturing Excellence. Since 1922.

1111 W. 35th Street • Chicago, IL 60609 USA
www.tripplite.com/support

Copyright © 2012 Tripp Lite. All rights reserved.

201202224 93-3165