Owner's Manual

TRIPP·LITE | WorkWise™

Tilt Wall Mount for Flat and Curved Screens – Security Version

Model: DWTSC3255MUL

200x200 / 300x300 / 400x200 / 400x400

55" MAX

99 lb. (45 kg) MAX

Este manual esta disponible en español en la página de Tripp Lite: www.tripplite.com

Ce manuel est disponible en français sur le site Web de Tripp Lite : www.tripplite.com

Русскоязычная версия настоящего руководства представлена на веб-сайте компании Tripp Lite по адресу: www.tripplite.com

Dieses Handbuch ist in deutscher Sprache auf der Tripp Lite-Website verfügbar: www.tripplite.com

PROTECT YOUR INVESTMENT!

Register your product for quicker service and ultimate peace of mind.

You could also win an ISOBAR6ULTRA surge protector—a $100 value!

www.tripplite.com/warranty

TRIPP·LITE

95 Manufacturing Excellence.

1111 W. 35th Street, Chicago, IL 60609 USA • www.tripplite.com/support

Copyright © 2017 Tripp Lite. All rights reserved.

Important Safety Instructions

NOTE: Read the entire instruction manual before you start installation and assembly.

⚠ WARNING

- Do not begin the installation until you have read and understood the instructions and warnings contained in this manual. If you have any questions regarding any of the instructions or warnings, please visit www.tripplite.com/support.
- This mounting bracket was designed to be installed and utilized ONLY as specified in this manual. Improper installation of this product may cause damage or serious injury.
- This product should only be installed by someone of good mechanical ability, with basic building experience and a full understanding of this instruction manual.
- Make sure that the mounting surface can safely support the combined load of the equipment and all attached hardware and components.
- If mounting to wood wall studs, make sure that mounting screws are anchored into the center of the studs. The use of a stud finder is highly recommended.
- Always use an assistant or mechanical lifting equipment to safely lift and position equipment.
- Tighten screws firmly, but do not over-tighten. Over-tightening can damage the items, greatly reducing their holding power.
- This product is intended for indoor use only. Using this product outdoors could lead to product failure and personal injury.

Warranty & Product Registration

5-Year Limited Warranty

Seller warrants this product, if used in accordance with all applicable instructions, to be free from original defects in material and workmanship for a period of 5 years from the date of initial purchase. If the product should prove defective in material or workmanship within that period, Seller will repair or replace the product, in its sole discretion.

THIS WARRANTY DOES NOT APPLY TO NORMAL WEAR OR TO DAMAGE RESULTING FROM ACCIDENT, MISUSE, ABUSE OR NEGLECT. SELLER MAKES NO EXPRESS WARRANTIES OTHER THAN THE WARRANTY EXPRESSLY SET FORTH HEREIN. EXCEPT TO THE EXTENT PROHIBITED BY APPLICABLE LAW, ALL IMPLIED WARRANTIES, INCLUDING ALL WARRANTIES OF MERCHANTABILITY OR FITNESS, ARE LIMITED IN DURATION TO THE WARRANTY PERIOD SET FORTH ABOVE; AND THIS WARRANTY EXPRESSLY EXCLUDES ALL INCIDENTAL AND CONSEQUENTIAL DAMAGES. (Some states do not allow limitations on how long an implied warranty lasts, and some states do not allow the exclusion or limitation of incidental or consequential damages, so the above limitations or exclusions may not apply to you. This warranty gives you specific legal rights, and you may have other rights which vary from jurisdiction to jurisdiction).

WARNING: The individual user should take care to determine prior to use whether this device is suitable, adequate or safe for the use intended. Since individual applications are subject to great variation, the manufacturer makes no representation or warranty as to the suitability or fitness of these devices for any specific application.

PRODUCT REGISTRATION

Visit www.tripplite.com/warranty today to register your new Tripp Lite product. You'll be automatically entered into a drawing for a chance to win a FREE Tripp Lite product!*

* No purchase necessary. Void where prohibited. Some restrictions apply. See website for details.

Tripp Lite has a policy of continuous improvement. Specifications are subject to change without notice.

Component Checklist

IMPORTANT: Ensure all parts according to the component checklist have been received prior to installation. If any parts are missing or faulty, visit www.tripplite.com/support for service.

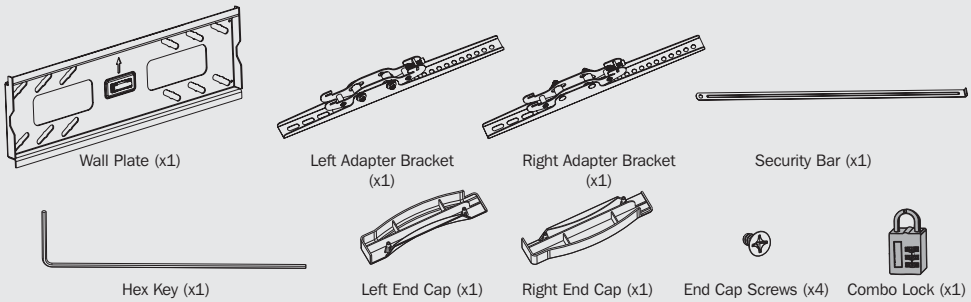

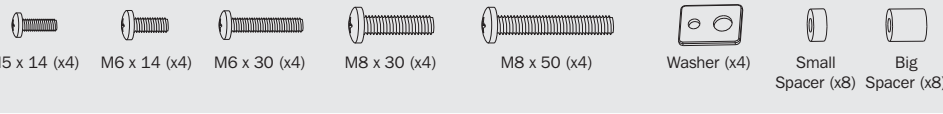

Installation

1 Assemble the Wall Plate

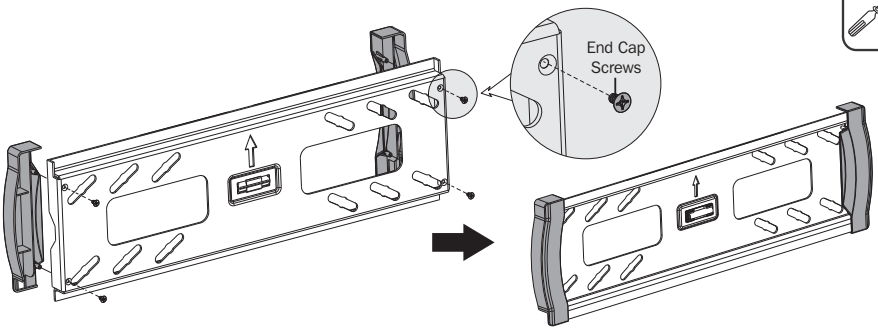

Installation

2A Mount on Wood Stud Wall

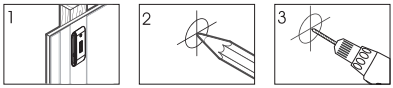

Find and mark the exact location of mounting holes

Drill pilot holes

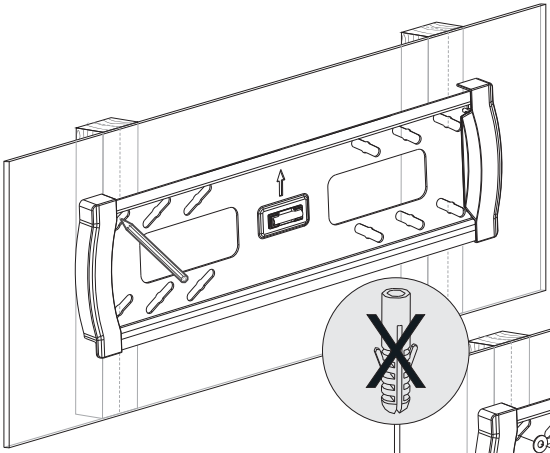

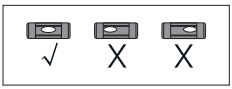

Screw the assembled wall plate onto the wall

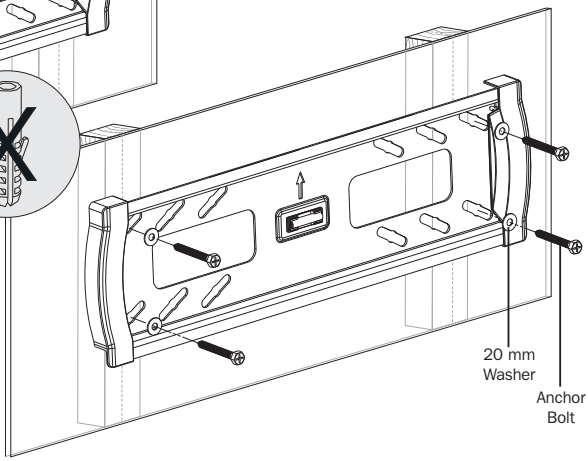

WARNING

- **Make sure that mounting screws are anchored into the center of the studs. Use of a stud finder is highly recommended.**
- **Installers are responsible to provide hardware for other types of mounting situations.**
- **Installers must verify that the supporting surface will safely support the combined load of the equipment and all attached hardware and components.**

Installation

2B Mount on Solid Brick and Concrete Block

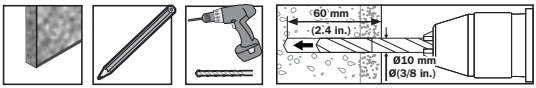

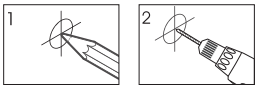

Find and mark the exact location of mounting holes

Drill pilot holes

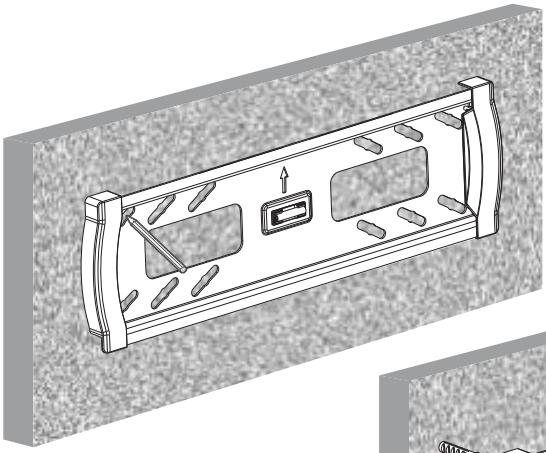

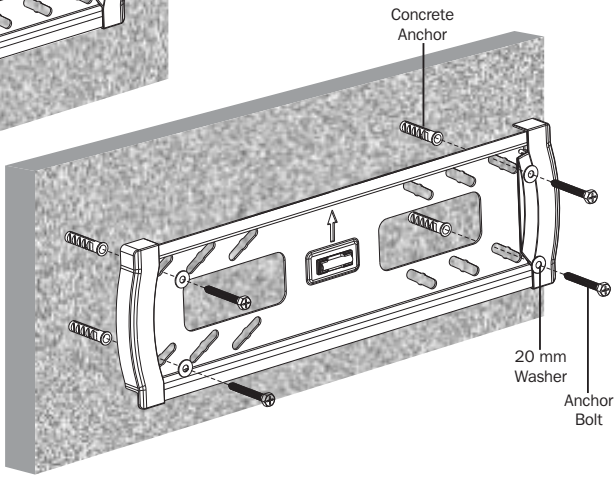

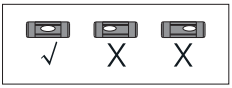

Screw the assembled wall plate onto the wall

WARNING

- **When installing wall mounts onto a concrete masonry unit (also known as a CMU or “cinder block”), verify that the actual concrete thickness is at least 35 mm (1-3/8”) in order to hold the concrete anchors. DO NOT DRILL INTO MORTAR JOINTS! Be sure to mount the assembled wall-mount plate with the included concrete anchors, D6 washers and anchor bolts onto solid sections of the blocks. The solid sections can generally be found 25 mm (1”) toward the middle of the block from either end. An electric drill on a slow setting is suggested to drill the hole rather than a hammer drill so as to avoid breaking out the back of the hole when entering a hollow section.**
- **Installers must verify that the supporting surface will safely support the combined load of the equipment and all attached hardware and components.**

Installation

3 Install Adapter Brackets

3-1 For Flat Back Screen

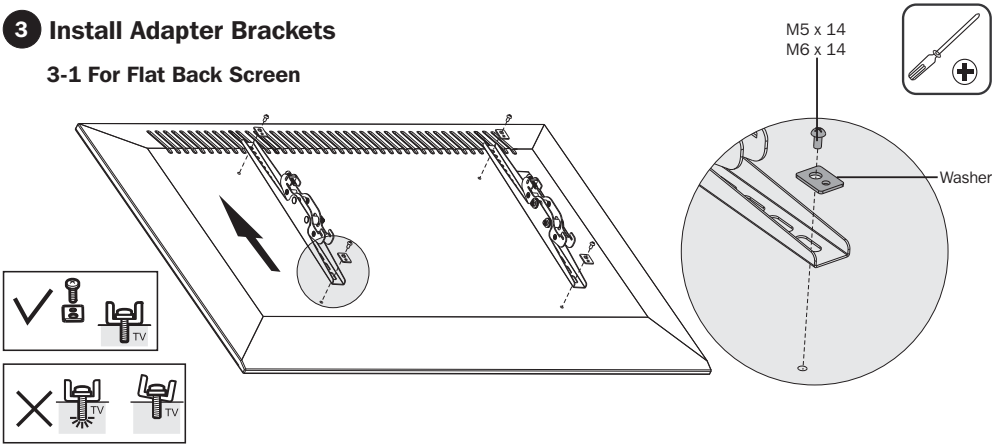

Note: Choose appropriate screws, washers and spacers (if necessary) according to the type of screen.

- Position the adapter brackets as close as possible to the center of the display.
- Screw the adapter brackets onto the display.

Firmly secure all screws. Do not over-tighten.

3 Install Adapter Brackets

3-2 For Curved Screen or Recessed Back Screen

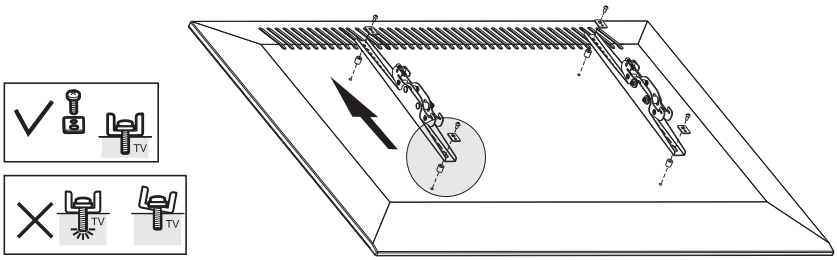

Installation

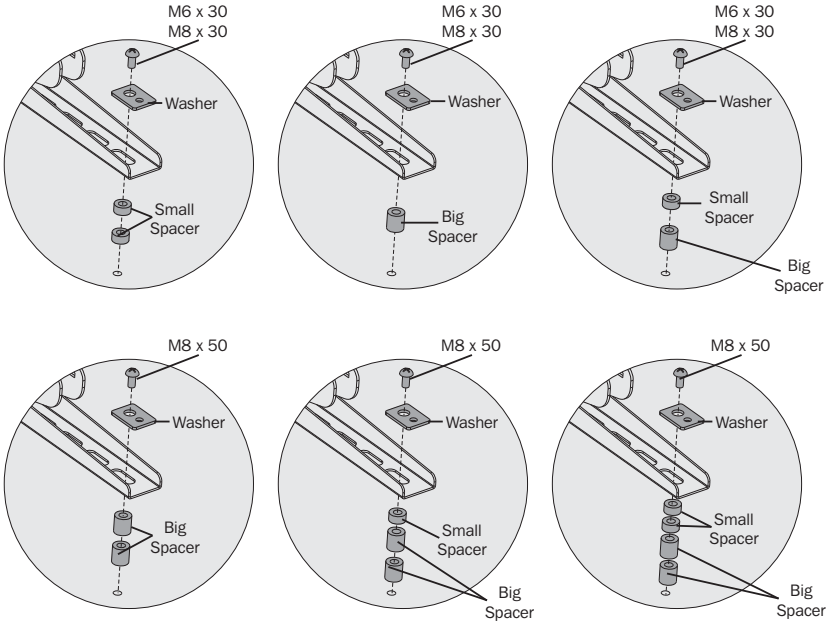

4 Hang Display onto the Wall Plate

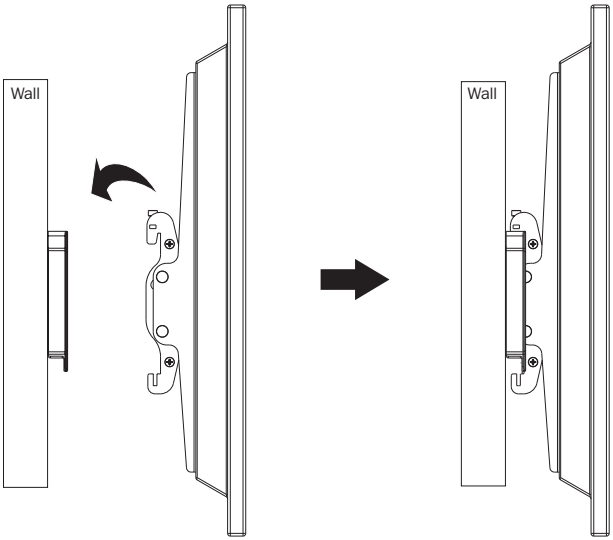

- Using an assistant or mechanical lifting equipment, hook the display with attached adapter brackets over the top of the mounted wall plate.
- Push the safety clamps on the bottom of the adapter brackets upward and tighten the two screws to lock each bracket to the wall plate.

Installation

5 Slide Security Bar through the Mounting Brackets and Attach Combo Lock to Secure

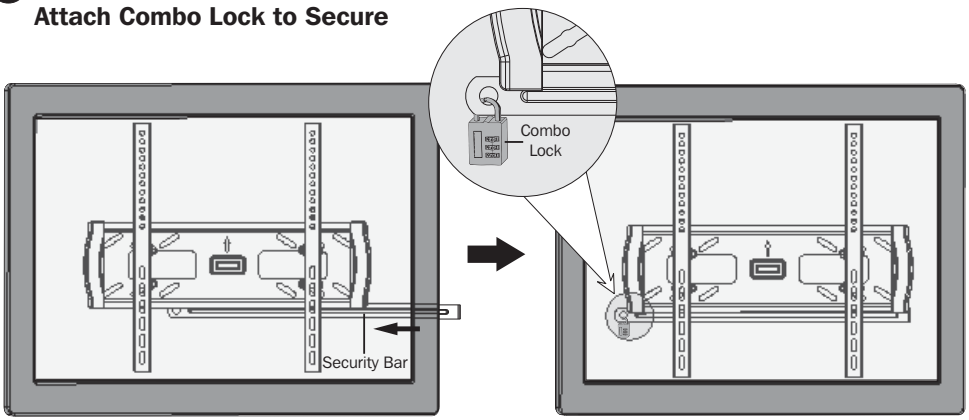

6 Adjustment

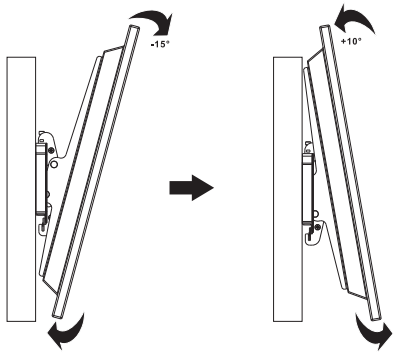

7 Use the Included Hex Key to Secure the Mounting Brackets to the Wall Plate

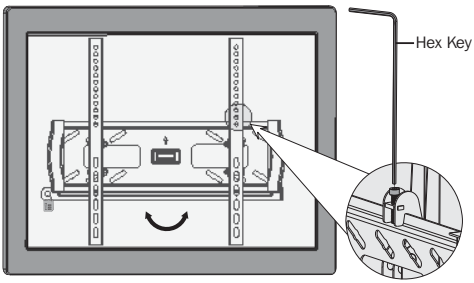

Maintenance

- **Check that the bracket is secure and safe to use at regular intervals (at least every three months).**
- **Please visit www.tripplite.com/support if you have any questions.**

1111 W. 35th Street, Chicago, IL 60609 USA • www.tripplite.com/support

17-12-095 93-3T0E_Rev8
LP22-44T