01

Eaton.com/PDUG4

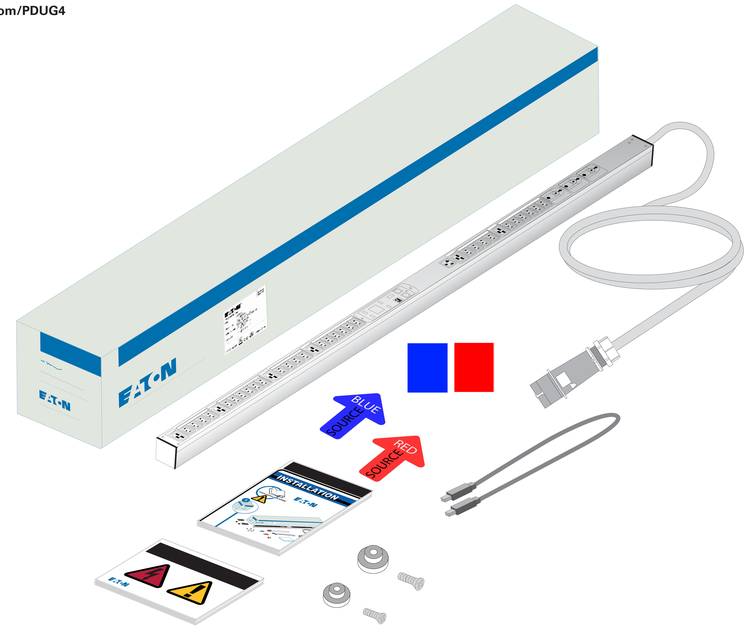

02

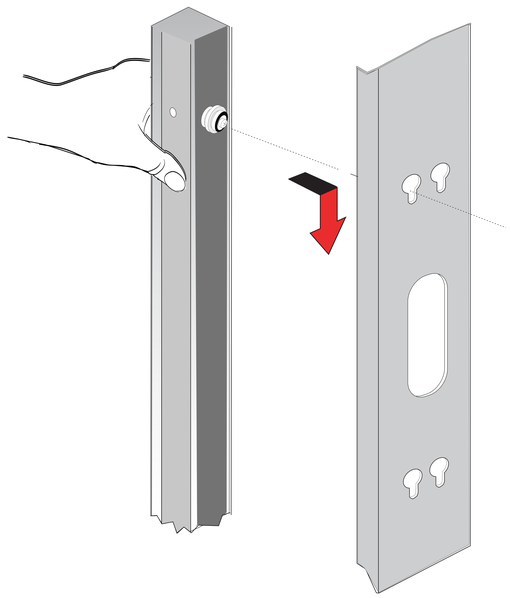

03

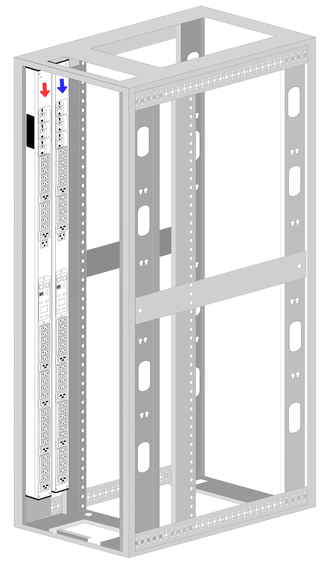

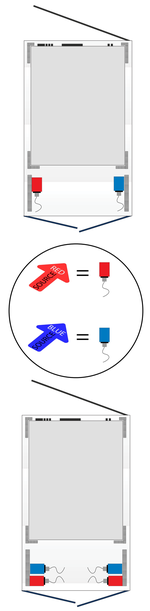

04

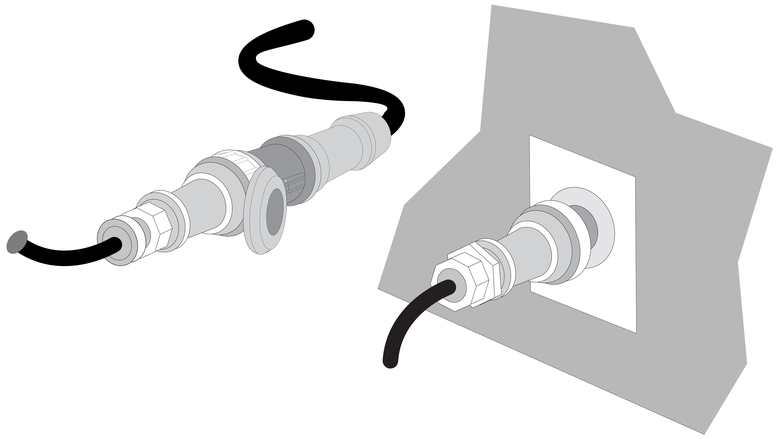

05

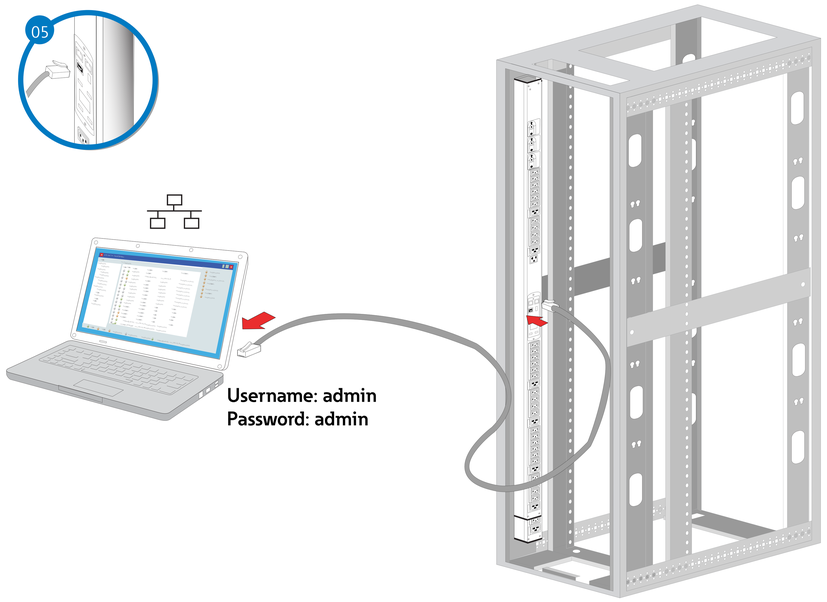

Username: admin
Password: admin

Eaton.com/PDUG4

Rack PDU G4

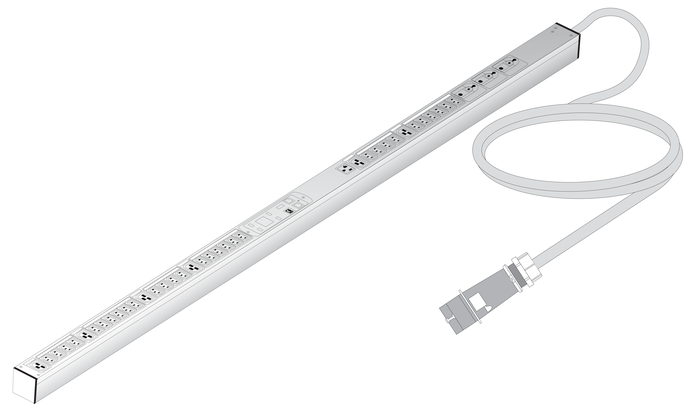

614-21357
P-164001182-Rev 3