Owner's Manual

TRIPP LITE
SERIES

HDMI over Cat6 Extenders for Medical Applications

Models:
B127M-101-H
B127M-100-H
B127M-004-H

Purchased product may differ from image.

Este manual está disponible en español en la página de Eaton:
Tripplite.Eaton.com/support

Ce manuel est disponible en français sur le site Web de Eaton :
Tripplite.Eaton.com/support

Dieses Handbuch ist in deutscher Sprache auf der Eaton-Website verfügbar:
Tripplite.Eaton.com/support

Questo manuale è disponibile in italiano sul sito web di Eaton:
Tripplite.Eaton.com/support

Powering Business Worldwide

Package Contents

B127M-004-H Splitter Unit

- External Power Supply (Input: 100-240V, 50/60 Hz, 0.6A; Output: 24V 1A)
- International Plug Adapters: NEMA 1-15P North America; AS/NZS 3112 Australia; BS 1363 U.K.; CEE 7/16 Schuko
- Mounting Hardware
- Owner's Manual

B127M-100-H Receiver Unit

- Mounting Hardware
- Owner's Manual

B127M-101-H Extender Kit

- External Power Supply (Input: 100-240V, 50/60 Hz, 0.6A; Output: 24V 1A)
- International Plug Adapters: NEMA 1-15P North America; AS/NZS 3112 Australia; BS 1363 U.K.; CEE 7/16 Schuko
- Mounting Hardware
- Owner's Manual

Optional Accessories

- N262-Series Cat6/6a 26 AWG STP Patch Cables
- P569-XXX-CERT or P568-XXX-2A Series High-Speed HDMI 2.0 Cables

Product Features

B127M-004-H

- Split and extend an HDMI signal to four receivers up to 230 ft. (70 m) away over STP Cat6 cabling
- Supports video resolutions up to 4K x 2K (3840 x 2160) @ 60 Hz, as specified in HDMI 2.0, with 4:4:4 Chroma Subsampling
- Support up to 7.1-channel surround sound audio
- Power-over-Cable (PoC) technology provides power from splitter unit to all connected receiver units
- HDCP 2.2 and HDR-compatible
- Multi-resolution support allows all connected receivers to connect to any 1080p, 4K/30 Hz or 4K/60 Hz HDMI display without affecting the resolution of the other connected displays
- Local HDMI port supports 4K/60 Hz video
- Meets IEC 61000-4-2 (ESD) Test Level 4 Standard (8 KV Contact, 15 KV Air), IEC 60601-1-2 & CISPR 11 Group 1 Class EMI/RFI Standards for medical environments
- Includes mounting hardware that enables the splitter unit to be wall-mounted, rack-mounted or pole-mounted
- Plug-and-play – no software or drivers required

Product Features

B127M-100-H

- Receive an HDMI signal from a B127M transmitter/splitter up to 230 ft. (70 m) away over STP Cat6 cabling
- Supports video resolutions up to 4K x 2K (3840 x 2160) @ 60 Hz, as specified in HDMI 2.0, with 4:4:4 Chroma Subsampling
- Support up to 7.1-channel surround sound audio
- Power-over-Cable (PoC) technology provides power to the receiver from a connected extender/splitter
- HDCP 2.2 and HDR-compatible
- Meets IEC 61000-4-2 (ESD) Test Level 4 Standard (8 KV Contact, 15 KV Air), IEC 60601-1-2 & CISPR 11 Group 1 Class EMI/RFI Standards for medical environments
- Includes mounting hardware that enables the receiver unit to be wall-mounted, rack-mounted or pole-mounted
- Plug-and-play – no software or drivers required

Product Features

B127M-101-H

- Transmitter extends an HDMI signal to the receiver up to 230 ft. (70 m) away over STP Cat6 cabling
- Supports video resolutions up to 4K x 2K (3840 x 2160) @ 60 Hz, as specified in HDMI 2.0, with 4:4:4 Chroma Subsampling
- Support up to 7.1-channel surround sound audio
- Power-over-Cable (PoC) technology provides power from transmitter unit to connected receiver unit
- HDCP 2.2 and HDR-compatible
- Multi-resolution support allows connected receiver to connect to any 1080p, 4K/30 Hz or 4K/60 Hz HDMI display
- Local HDMI port supports 4K/60 Hz video
- Meets IEC 61000-4-2 (ESD) Test Level 4 Standard (8 KV Contact, 15 KV Air), IEC 60601-1-2 & CISPR 11 Group 1 Class EMI/RFI Standards for medical environments
- Includes mounting hardware that enables the transmitter and receiver units to be wall-mounted, rack-mounted or pole-mounted
- Plug-and-play – no software or drivers required

Disclaimer

Before installation, please check the following settings of your source(s) and TV/monitor(s):

1. Set display to 60 Hz. Double-check factory settings, as default can be set to a lower frequency (Hz) than advertised.
2. Ensure the input setting of your monitor is set at HDMI 2.0. Some displays may have default setting at HDMI 1.4.
3. Verify your monitor has the HDR feature enabled. Some displays may have this feature disabled as a factory setting.
4. Check if the Ultra HD (UHD) Deep Color setting is enabled on your TV/monitor. Confirm with your TV/monitor manufacturer which HDMI ports support UHD Deep Color.

Note: *To connect a local monitor to the transmitter in your installation, the UHD Deep Color setting may need to be disabled on your local TV/monitor (depending make/mode) to achieve 4K @ 60 Hz resolution.*

Mounting Instructions

The B127M-004-H, B127M-100-H and B127M-101-H include mounting hardware that allows for a variety of mounting methods.

The following images illustrate how the included mounting brackets can be attached for different installations.

Note: *The model shown in the below images is for illustrative purposes only. Your product may vary by model number, size or port orientation. The mounting options for all over Cat6 units are the same.*

Wall-Mount

19” Rack-Mount

Pole-Mount

Standard Splitter Installation

Notes:

- *Test to ensure the entire installation works properly before pulling cables through ceilings/walls.*
- *To maintain EMF/ESD/RFI standards and achieve maximum distance and performance, use 26 AWG STP Cat6/6a cable. All N262-Series Cat6/6a cables are made with 26 AWG STP cabling for maximum transmission quality and EMI/ESD/RFI protection.*
- *The installation diagram shows a B127A-004-H splitter unit and B127M-100-H receiver units.*
- *External power is not required for remote receiver units due to Power over Cable (PoC) technology incorporated in the units.*

Standard Splitter Installation

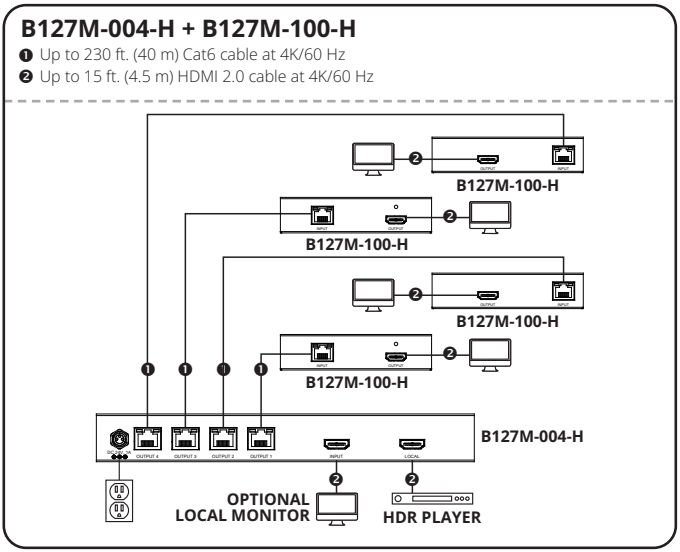

1. Make sure all equipment in the installation—such as TVs, Blu-ray™ players and the splitter—is powered OFF.
2. Using an HDMI 2.0 cable (such as P569-XXX-CERT or P568-XXX-2A Series cables), connect the HDMI source to the INPUT port on the splitter unit.

Standard Splitter Installation

3. **Optional for B127M-004-H:** Using an HDMI 2.0 cable (such as P569-XXX-CERT or P568-XXX-2A Series cables), connect a local monitor to the LOCALOUT port on the B127M-004-H unit.
4. Using 26 AWG STP Cat6/6a cable, connect the RJ45 output ports on the local splitter unit to the RJ45 input ports of up to four remote receiver units.
5. Using an HDMI 2.0 cable (such as P569-XXX-CERT or P568-XXX-2A Series cables), connect the remote receiver unit's HDMI port to a monitor.
6. Turn on the power to your connected TVs/monitors. The LOCAL (orange) LED will illuminate to indicate the local port has been connected to a display.
7. Connect the external power supply to the splitter unit. Plug it into an available wall outlet or a surge protector, power distribution unit (PDU) or uninterruptible power supply (UPS). The POWER (green) LED on the local splitter unit will illuminate to indicate the unit is receiving power from the external power supply. The POWER (green) LED on the remote receiver units will illuminate to indicate the unit is receiving power from the local splitter unit through PoC technology.

Standard Splitter Installation

8. Turn on the power to the HDMI source. The OUTPUT (orange) LED on the local splitter unit will illuminate to indicate a signal is being received from the source.
9. The (orange) RJ45 LED will illuminate on both the local splitter and remote receiver units to indicate a signal is being received from the source to display. The screen should now display on the connected monitor(s).

Standard Extender Kit Installation

Notes:

- *Test to ensure the entire installation works properly before pulling cables through ceilings/walls.*
- *To maintain EMF/ESD/RFI standards and achieve maximum distance and performance, use 26 AWG STP Cat6/6a cable. All N262-Series Cat6/6a cables are made with 26 AWG STP cabling for maximum transmission quality and EMI/ESD/RFI protection.*
- *The installation diagram shows a B127A-101-H transmitter and receiver kit.*
- *External power is not required for remote receiver units due to Power over Cable (PoC) technology incorporated in the units.*

B127M-101-H

❶ Up to 230 ft. (40 m) Cat6 cable at 4K/60 Hz
❷ Up to 15ft. (4.5 m) HDMI 2.0 cable at 4K/60 Hz

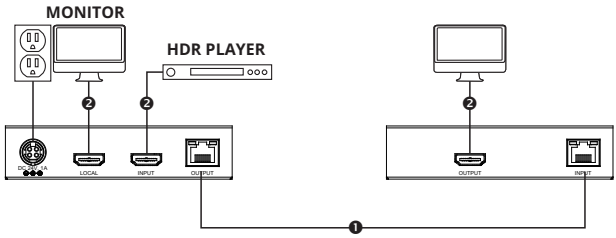

Standard Extender Kit Installation

1. Make sure all equipment in the installation—such as TVs, Blu-ray™ players and the transmitter and receiver units—are powered OFF.
2. Using an HDMI 2.0 cable (such as P569-XXX-CERT or P568-XXX-2A Series cables), connect the HDMI source to the INPUT port on the transmitter unit.
3. **Optional for B127M-101-H:** Using an HDMI 2.0 cable (such as P569-XXX-CERT or P568-XXX-2A Series cables), connect a local monitor to the LOCALOUT port on the B127M-101-H transmitter unit.
4. Using 26 AWG STP Cat6/6a cable, connect the RJ45 output port on the local transmitter unit to the RJ45 input port of the remote receiver unit.
5. Using an HDMI 2.0 cable (such as P569-XXX-CERT or P568-XXX-2A Series cables), connect the remote receiver unit's HDMI port to a monitor.
6. Turn on the power to your connected TVs/monitors. The LOCAL (orange) LED will illuminate to indicate the local port has been connected to a display.

Standard Extender Kit Installation

8. Connect the external power supply to the transmitter unit. Plug the unit into an available wall outlet or a surge protector, power distribution unit (PDU) or uninterruptible power supply (UPS). The POWER (green) LED on the local splitter unit will illuminate to indicate the unit is receiving power from the external power supply. The POWER (green) LED on the remote receiver unit will illuminate to indicate the unit is receiving power from the local transmitter unit through PoC technology.

9. Turn on the power to the HDMI source. The OUTPUT (orange) LED on the local transmitter unit will illuminate to indicate a signal is being received from the source.

10. The (orange) RJ45 LED will illuminate on both the local transmitter and remote receiver units to indicate a signal is being received from the source to display. The screen should now display on the connected monitor(s).

Warranty

1-Year Limited Warranty

We warrant our products to be free from defects in materials and workmanship for a period of one (1) year from the date of initial purchase. Our obligation under this warranty is limited to repairing or replacing (at its sole option) any such defective products. Visit Tripplite.Eaton.com/support/product-returns before sending any equipment back for repair. This warranty does not apply to equipment which has been damaged by accident, negligence or misapplication or has been altered or modified in any way.

EXCEPT AS PROVIDED HEREIN, WE MAKE NO WARRANTIES, EXPRESS OR IMPLIED, INCLUDING WARRANTIES OF MERCHANTABILITY AND FITNESS FOR A PARTICULAR PURPOSE. Some states do not permit limitation or exclusion of implied warranties; therefore, the aforesaid limitation(s) or exclusion(s) may not apply to the purchaser.

EXCEPT AS PROVIDED ABOVE, IN NO EVENT WILL WE BE LIABLE FOR DIRECT, INDIRECT, SPECIAL, INCIDENTAL OR CONSEQUENTIAL DAMAGES ARISING OUT OF THE USE OF THIS PRODUCT, EVEN IF ADVISED OF THE POSSIBILITY OF SUCH DAMAGE. Specifically, we are not liable for any costs, such as lost profits or revenue, loss of equipment, loss of use of equipment, loss of software, loss of data, costs of substitutes, claims by third parties, or otherwise.

Warranty

WEEE Compliance Information for Customers and Recyclers (European Union)

Under the Waste Electrical and Electronic Equipment (WEEE) Directive and implementing regulations, when customers buy new electrical and electronic equipment from Eaton, they are entitled to:

- Send old equipment for recycling on a one-for-one, like-for-like basis (this varies depending on the country)
- Send the new equipment back for recycling when this ultimately becomes waste

WARNING

Use of this equipment in life support applications where failure of this equipment can reasonably be expected to cause the failure of the life support equipment or to significantly affect its safety or effectiveness is not recommended.

Eaton has a policy of continuous improvement. Specifications are subject to change without notice. Photos and illustrations may differ slightly from actual products.

Powering Business Worldwide

Eaton
1000 Eaton Boulevard
Cleveland, OH 44122
United States
Eaton.com

933D73

© 2023 Eaton
All Rights Reserved
Publication No. 23-10-135 / 93-3D73_RevD
November 2023

Eaton is a registered trademark.

All trademarks are property of their respective owners.